THIS DRAWING IS UNPUBLISHED. RELEASED FOR PUBLICATION 2011
© COPYRIGHT 2011 BY - ALL RIGHTS RESERVED.

REVISIONS

P	LTR	DESCRIPTION	DATE	DWN	APVD
	D	ECR-14-009314	24MAR2015	M.P.	M.G.
	D1	REVISED (ECR-15-014031)	25SEP2015	M.G.	M.G.
	D2	REVISED PER ECO-17-001706	10FEB2017	C.A.	M.G.

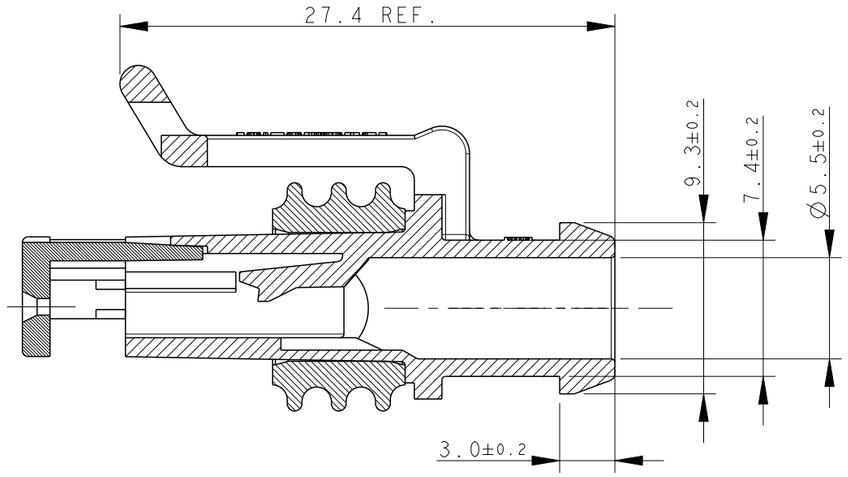

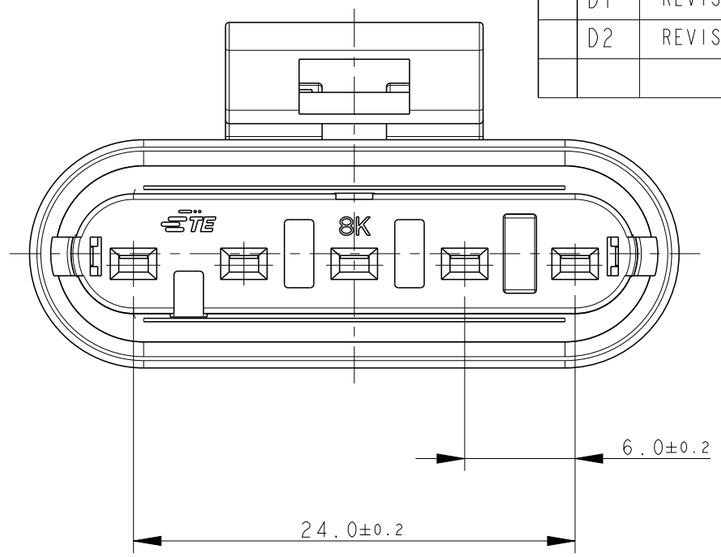

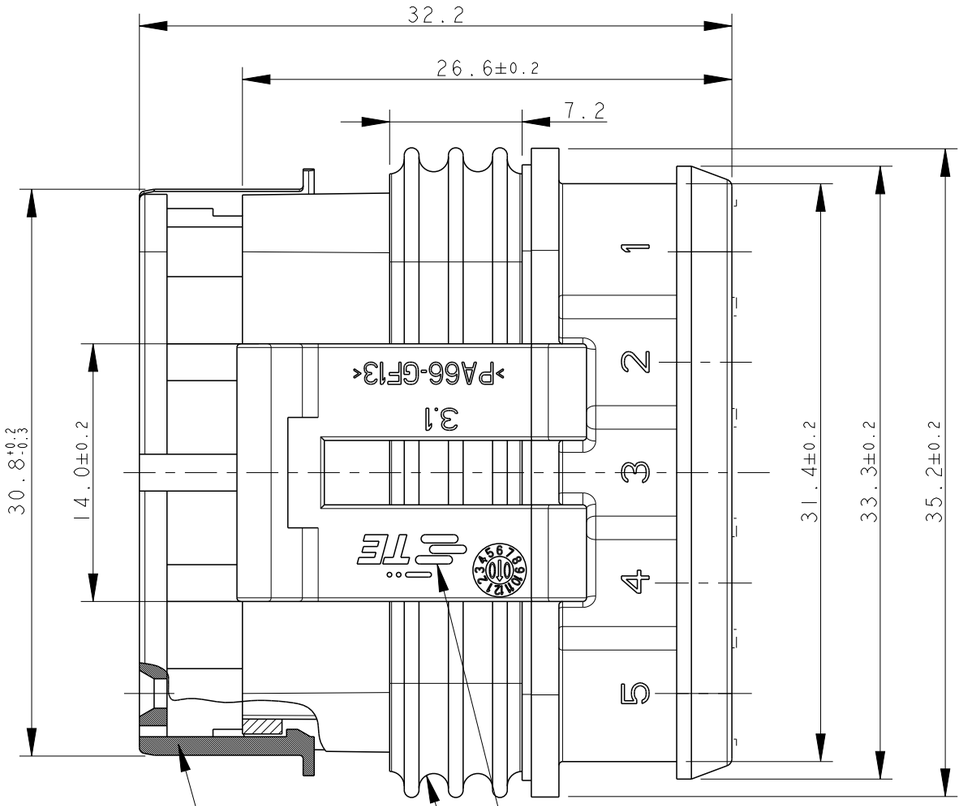

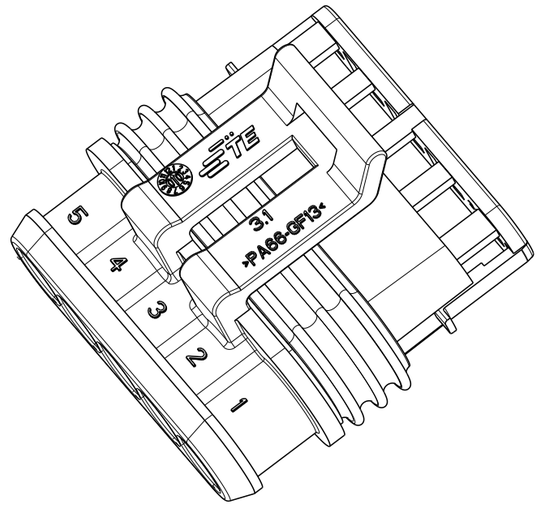

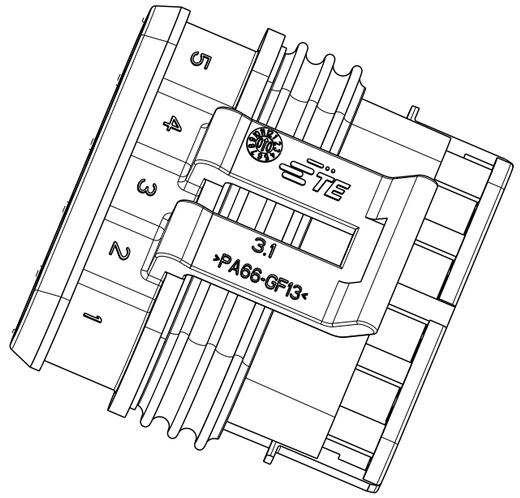

1) FOR COUNTERPART DETAILS, SEE SHEET 2 OF 2

FINISH/COLOR	MATERIAL	PART NUMBER
GRAY	HOUSING+SEC.LOCK: PA66-GF SEALING: LSR	282089-2
BLACK	HOUSING+SEC.LOCK: PA66-GF SEALING: LSR	282089-1

THIS DRAWING IS A CONTROLLED DOCUMENT.

DIMENSIONS: mm

TOLERANCES UNLESS OTHERWISE SPECIFIED:
0 PLC ±-
1 PLC ±0.3
2 PLC ±-
3 PLC ±-
4 PLC ±-
ANGLES ±2°

MATERIAL - SEE TABLE

FINISH - SEE TABLE

DWN C. BERTINI 05-1992
CHK A. BRUNI 05-1992
APVD - -
PRODUCT SPEC 108-20090
APPLICATION SPEC 412-20000
WEIGHT 5.45gr

TE Connectivity

NAME - AMP SUPERSEAL 1.5 SRS. 5 POSITIONS PLUG ASS'Y

SIZE	CAGE CODE	DRAWING NO	RESTRICTED TO
A3	00779	C-282089	-

Customer Drawing | SCALE 3:1 | SHEET 1 OF 2 | REV D2

1470-19 (3/13)